BPA□□□□□□□□□□□□4□□2“Jumbo□□□□□

□□□

- □□□□□□□□BPA□□FDA□□□
- □□□□□□□□□2□□□□□□□□□□□□□□□□□□□□□□□□□□□□□□□□
- □□□□□□□□□□□□□
- □□□□□□□□□□□□□□□□□□□□□□□□□□□□

□□□□□

□□□□	□□□□□□□□□□
□□	FDA□□□□□□BPA□□
□□	17.8 * 19.1 * 9.5cm□□□□□2□□
Moq.	100pcs.
□□	-40□+230□□□
□□□□□	□□□□□□□□□□□□
□□	□□□□□□□□□□□□□□□□□□
□□□□	□□□
□□	□□DIY□□□□□□□□□□□□□□□□□□□
□□	□□□

Weight : 421g

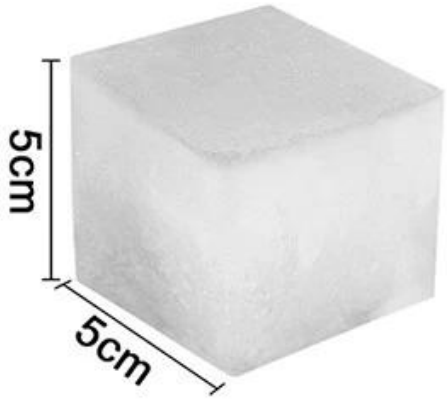

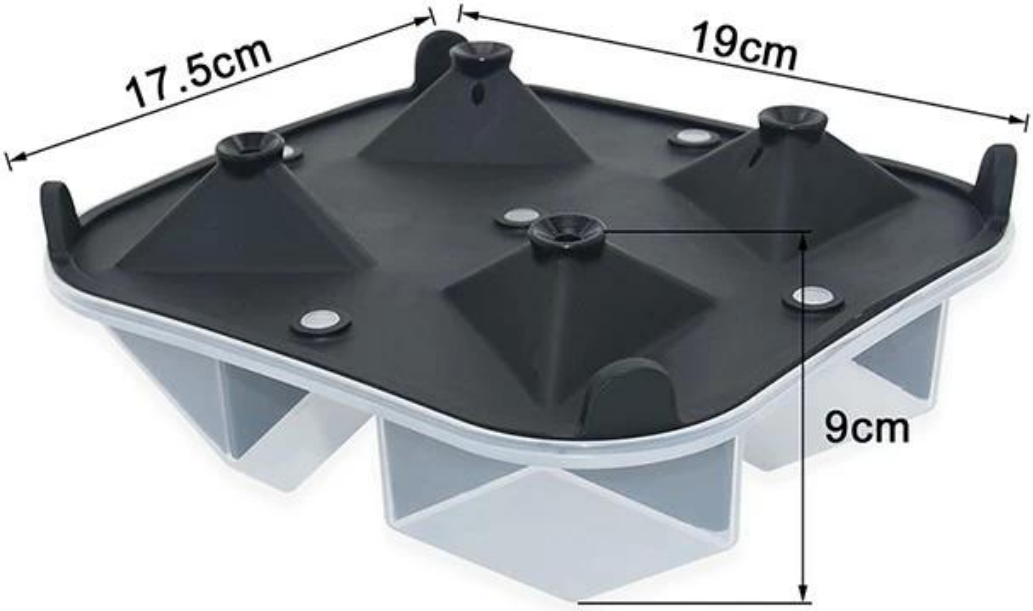

The tongue of ear design
Convenient take ice
The tongue of ear design
Convenient take ice
Comes with a funnel, water
injection without sprinkling
Drain hole design is
convenient for draining
excess water

[□□□□□□□□□□□□]

□□□□□

□□	□□□
□□□□□□	3-7□
□	1□□□□□□□□□□□□□ 2□□□□□□ 3□□□□□□□□
□□□□	1□□□□□DHL□UPS□FedEx□□ 2□□□□□□□□□□□□□□□□□□□□□□□□□□ 3□□□□□
□□□□□	5□20□□□□COMFIRN□□□□□□

[illegible]

[illegible]Benhaida[illegible]7[illegible]

[illegible]SGS[illegible]100[illegible]BPA[illegible]

[illegible]

*[illegible]SGS[illegible]100[illegible];
*[illegible]TradeaSurance[illegible]
*[illegible]EXW[illegible];
*[illegible]OEM / OEM[illegible]UPC[illegible]FNSKU[illegible]
*[illegible]FBA[illegible]

[illegible]

□□□□□□□□□□□□□□□□□□□□□
□□□Benhaida□□□□□□□□□
□□□www□ benhaida .cn.
□□□□□□□□+ 86-15818564213
□□□□□Maggie□AT□benhaida .com
Skype□Maggie4272.

□□□□□□□□□□□□□□□□□